niGLON

Installation **Essentials**

EX4T

4" Wall Fan with timer

Technical Drawing

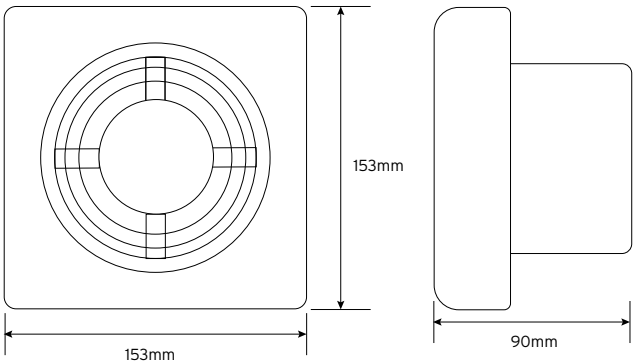

Technical Specifications

Rated Single Phase	220-240V ~ 50Hz
Wattage	17W
Standard of Compliance	IPX4
Certification	CE
Airflow	Up to 80CMH
Overrun Timer	Adjustable 2-30min
Dimensions	153 x 153 x 90mm

E&OE. Whilst every care has been take in ensuring the accuracy of this document, the Supplier accepts no liability whatsoever for any eventuality arising from errors or omissions within its catalogues, brochures, printed media or within any online presence.

0121 711 1990
sales@niglon.co.uk | www.niglon.co.uk

niGLON