niGLON™
Installation **Essentials**

FF1/45

45mm Dry Lining Box

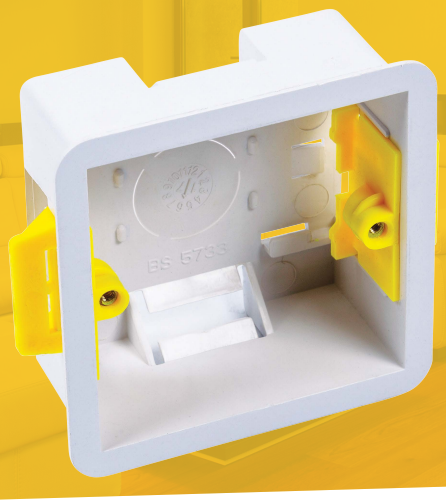

Technical Specifications

Panel Thickness	7-30mm
Cut Out Dimensions	73 x 73mm min.
Lug Type	Adjustable M3.5
Material	uPVC self-extinguishing
Mounting Depth	45mm
No. Gangs	1
Dimensions	84 x 84 x 45mm (HxWxD)
Rear Knockouts	1 x 25mm
Standards	BS5733, UKCA, RoHS

Technical Drawing

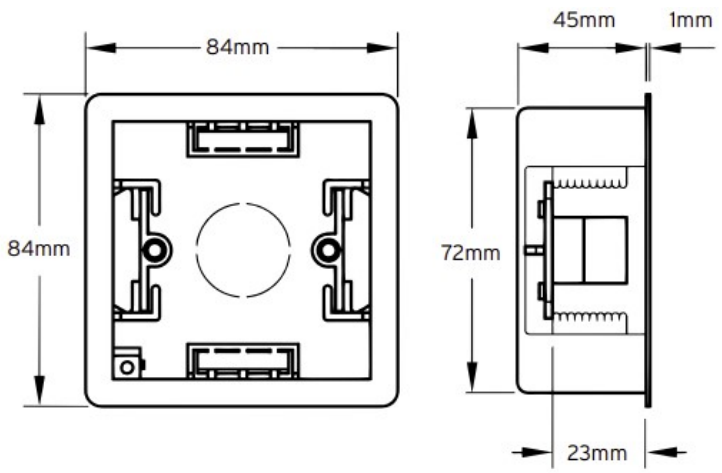

E&OE. Whilst every care has been take in ensuring the accuracy of this document, the Supplier accepts no liability whatsoever for any eventuality arising from errors or omissions within its catalogues, brochures, printed media or within any online presence.

0121 711 1990
sales@niglon.co.uk | www.niglon.co.uk

niGLON™